RISING FROM THE ASHES

A SHORT STORY ON LARGE PANEL SYSTEMS

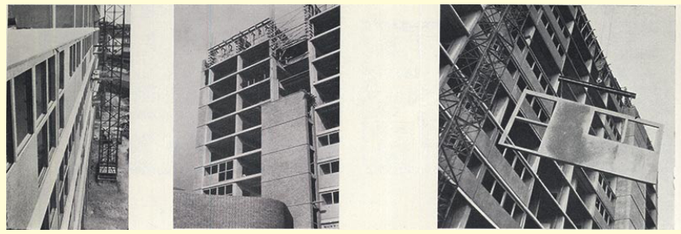

AND HOW TO TRANSORM THIS HEAVY PREFABRICATED CONCRETE SYSTEM INTO A SMART AND SUSTANIBLE

system using Kerto LVL.

HISTORY:

THE DREAM:

The term heavy prefabrication system denotes industrialized building systems that involved large, prefabricated loadbearing floor and wall panels in reinforced concrete. Within each system, it was possible to erect pre-defined buildings, with a relatively small assortment of standardized components. Economy was one of the major advantages, industrialized buildings could be erected faster with a less specialized workforce, increasing the financial benefits even more.

The emergence of heavy prefab was strongly linked to the immense and urgent need for cheap housing throughout Europe after the war. During the 1950s and 1960s, steady population growth, and ongoing scientific and technical developments in the building industry, prolonged this favourable atmosphere and enhanced the success of heavy prefab. In the 1970s, however, use of heavy prefabrication systems rapidly declined.This resulted from a general decline in the building sector, higher standards for thermal insulation, and trends in architectural design.

One of the first and most successful systems was developed by the French engineer Raymond Camus. Applied on a very large scale, it was one of the means by which the French government reached the very ambitious objective of constructing 20,000 dwellings a month.

France was a pioneer in the development of heavy prefabrication systems. In addition to the Camus system, a large number of internationally successful heavy prefabrication systems were developed in France, e.g. Coignet, Barets, Cauvet, Estiot, Tracoba. Features that differentiate the systems include the composition of the materials; production and curing processes; the different successive layers within one element; the dimensions of the elements; and joints.

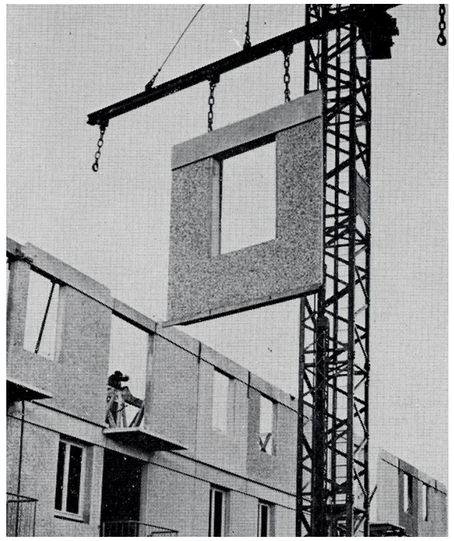

THE REALITY:

In 1984 the documentary 'Inquiry. The Great British Housing Disaster' was one of the first to be produced by the lauded BBC documentary film-maker Adam Curtis.
The documentary set out to investigate the origins of how they came to be built so poorly that thousands later needed to be demolished.

Instead, Coleman's 1985 work argues that in trying to emulate Le Corbusier's ideas, the tower block planners only succeeded in encouraging social problems. Although architects and local authorities intended the opposite, tower blocks quickly became, as Hanley sharply stated, 'slums in the sky'.

THE HERITAGE:

Compliant protections for residents in tower blocks can be very expensive to retrofit, and lessors (such as local authorities) have been sued for lack of a current fire safety inspection, or implementation of its recommendations; and when refurbished could do more harm than good, as proven for the 24-storey Grenfell Tower.

In this case, the rapid spread of the fire was believed to have been caused by recent remedial work, which added flammable exterior cladding. The safety instructions advised residents to stay indoors in the event of the fire, which proved fatal as they assumed a fire could not spread via the block's exterior.

DESIGN DEVELOPMENT:

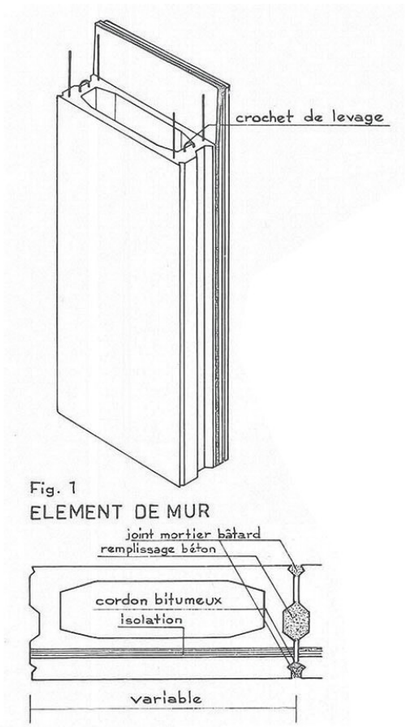

The drawing (left) explains the general principles of the panels.

"The façade elements were cast in steel moulds in consecutive layers that consisted of typically 6 cm of concrete (outside), 2 cm of glass fibre insulation or expanded polystyrene, 2.5 cm of reinforced concrete, a cavity, and lastly 4 cm of concrete (inside). To create one monolithic element, steel rods were pierced through the insulation layer and connected the outside and inside concrete layers (6 rods every square meter)."

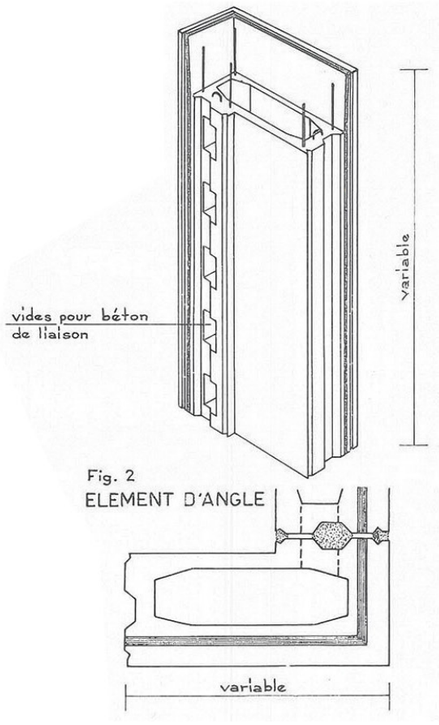

According to each system, the specifications vary.
Most commonly, this typology of buildings is formed by an in-situ concrete core and prefabricated walls.
The floors slabs can be made from prefabricated panels or on site-cast concrete, which determinates if it has structural columns or if it relays entirely on its structural cladding.

The idea is to develop a system in which single large prefabricated LVL (Laminated Veneer Lumber) component can solve the different functions required - as shown in the diagram.

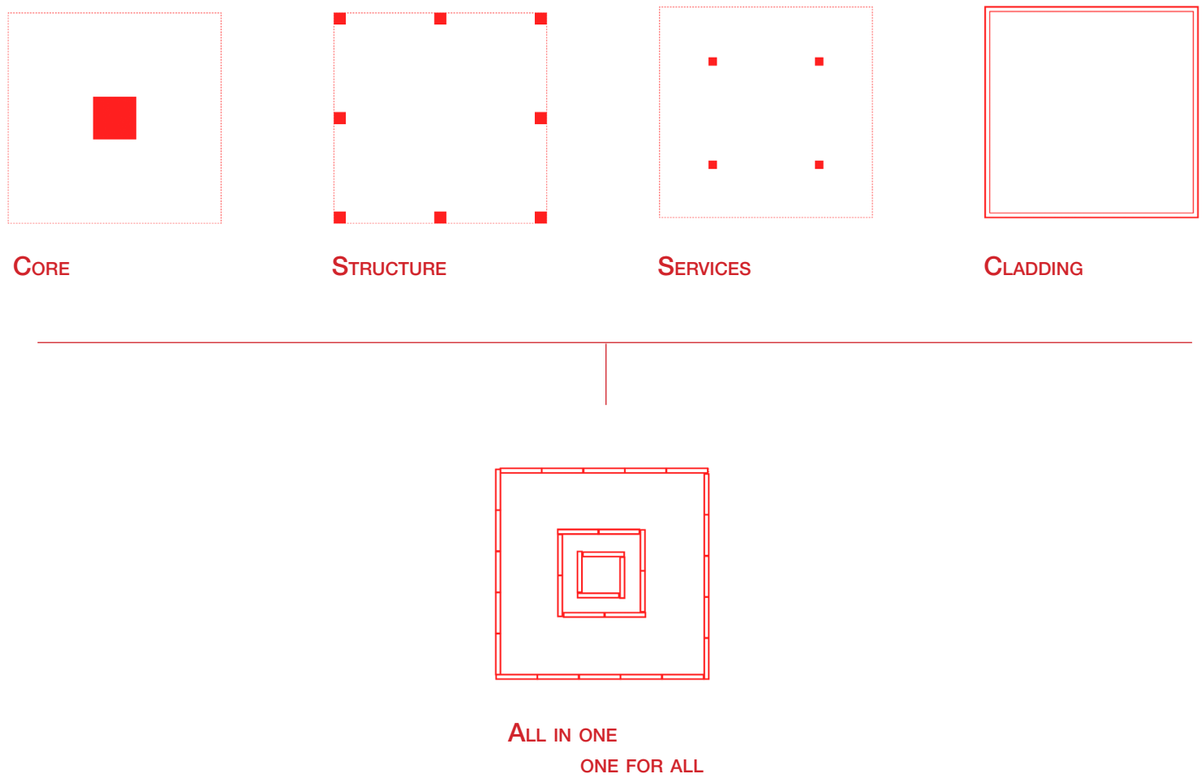

PANEL DEVELOPMENT:

Each panel is composed of two jigsaw layers of LVL (Laminated Veneer Lumber) interlocked together by other two LVL pieces.

These two LVL layers are the same, simply, one is rotated 180° and because the cuts are off-centred the two layers are offset. Not having the edge of the two layers in the same position helps both for thermal efficiency and structural capability.

Moreover, the jigsawed edge of the layers helps to strengthen each panel with the next one, reducing the possibility of collapse - as experienced at Ronan Point in May 1968.

The holes are designed to accommodate the floor beams.
This system is designed to interlock each component into the other one and contribute to forming a solid structure

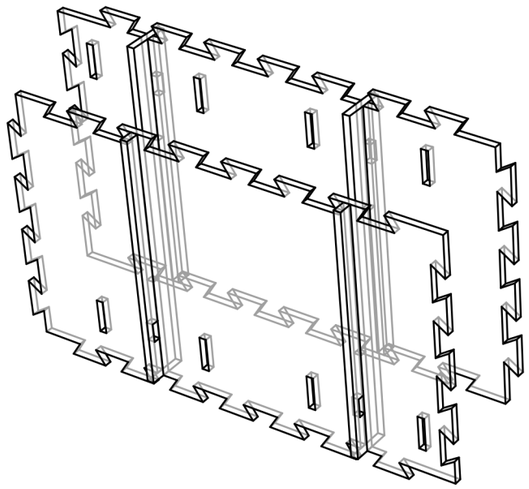

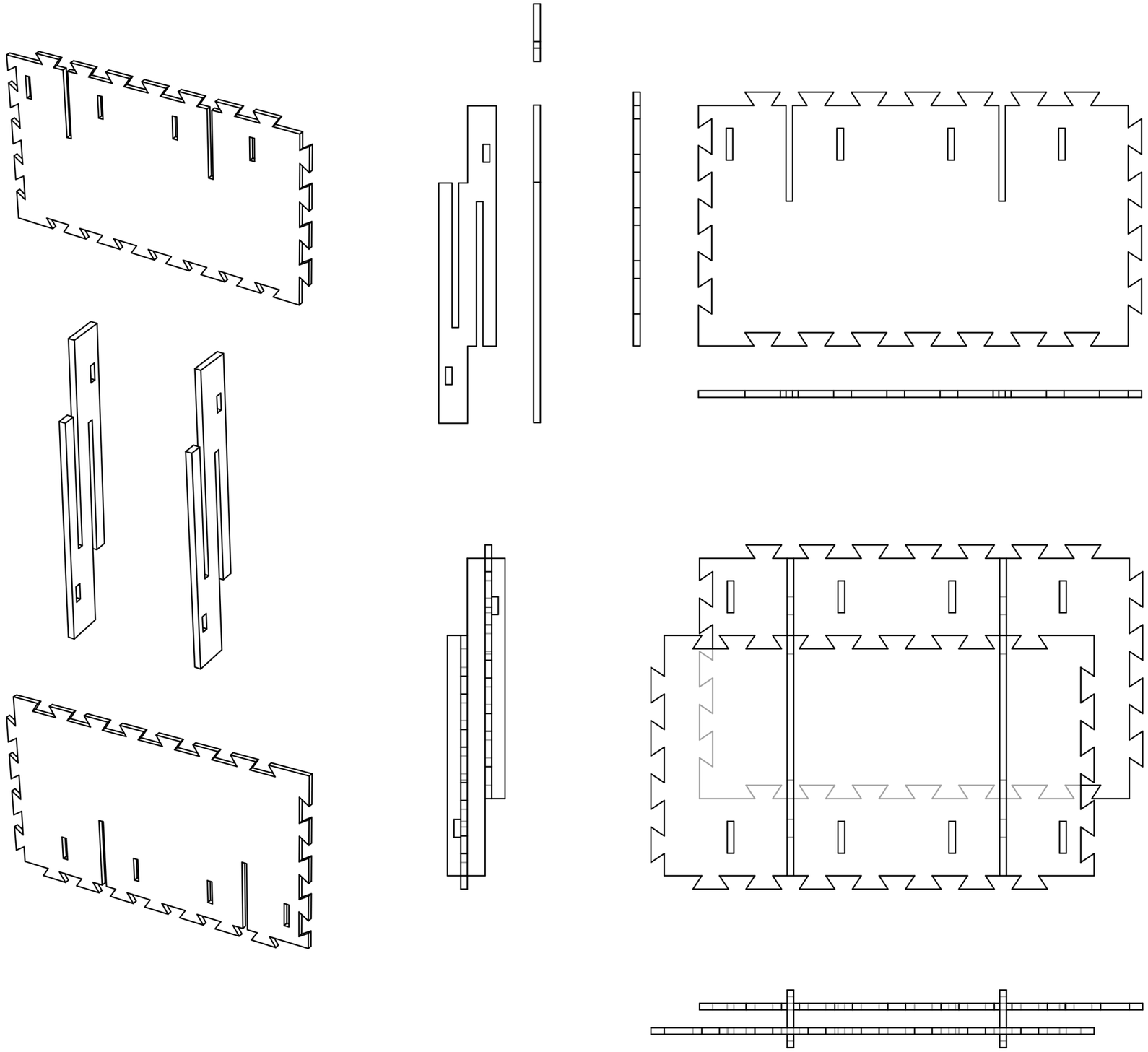

PANEL DEVELOPMENT:

Windows and doors are prefabricated and assembled with its specific panel in a factory.
The shape, design and specifications can vary to allow more flexible solutions.
In here, I have explored a simple rectangular opening, reflecting the concrete pre-fab tower block that I am redesigning.

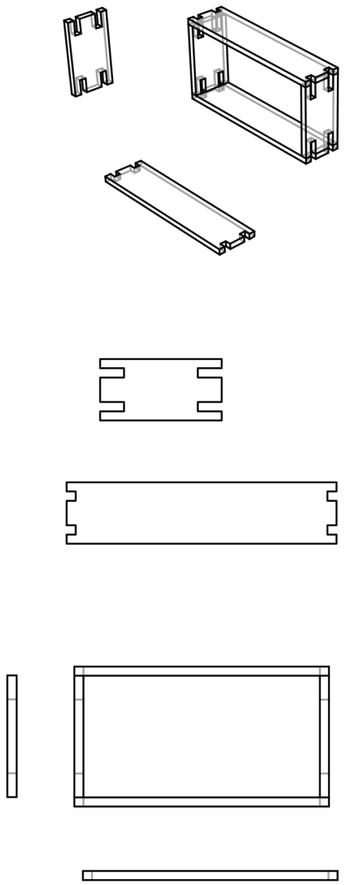

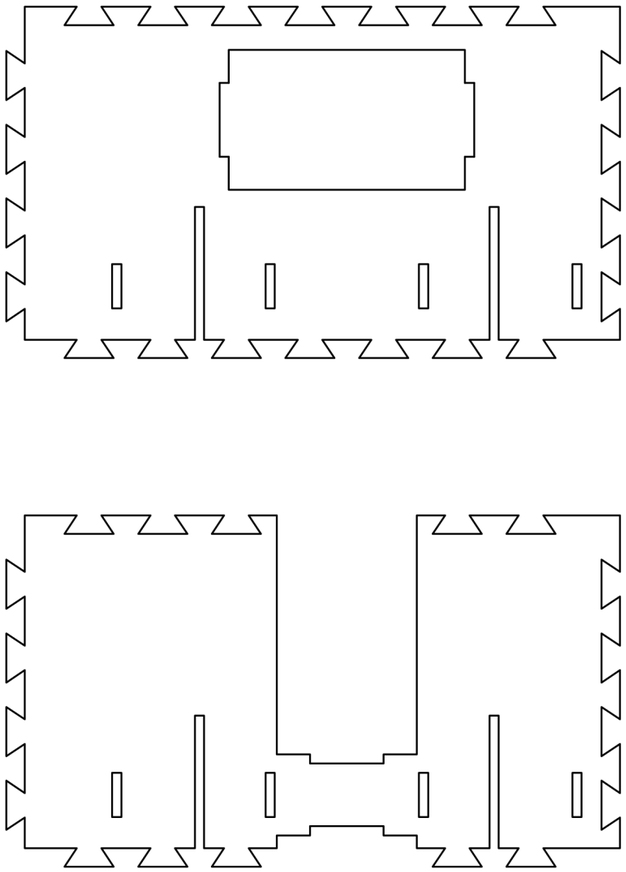

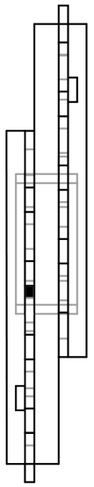

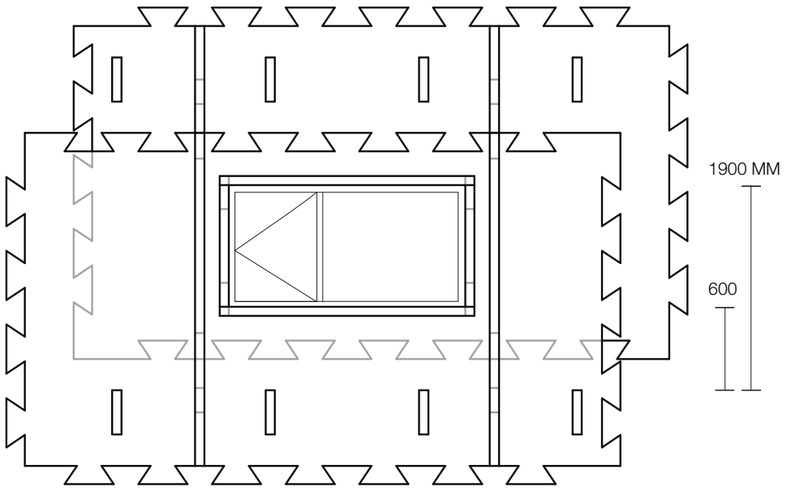

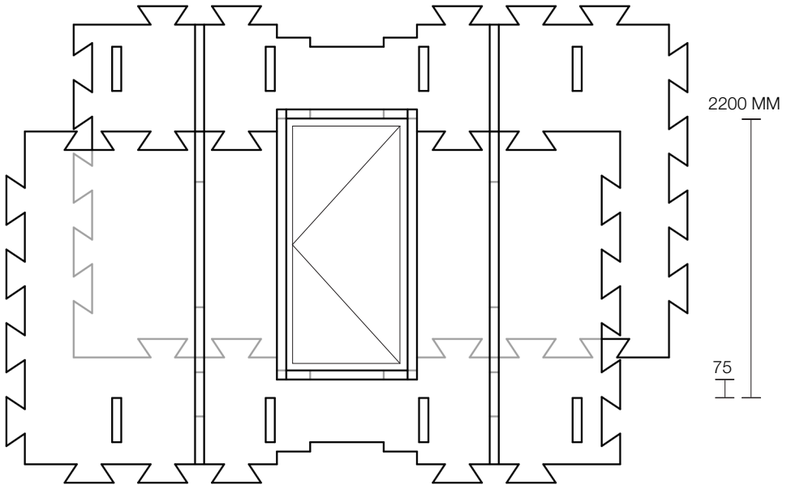

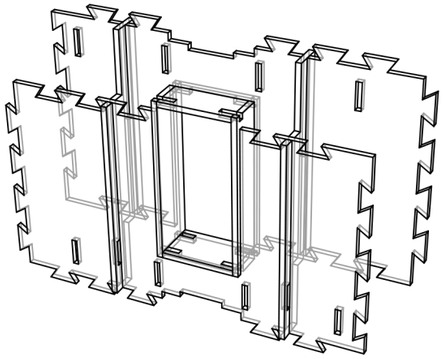

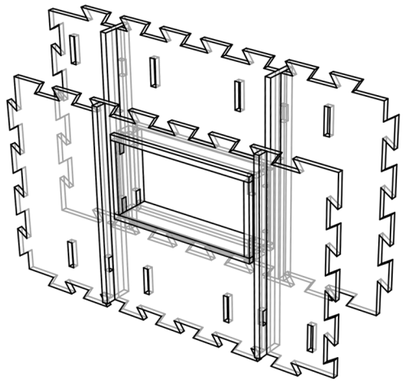

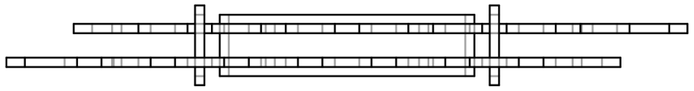

SCALE 1:50 @ A3

0 0.5 1 2 M.

PANEL DEVELOPMENT:

This drawing shows how the offset edges of two units on two adjoining floors, above and below each other meet and join.

Rubber sealing rod is glued to the edges of each panel to fill the 3mm tollerance between each panel.
An air tight sealing tape over the joints make sure that the building is weather tight.

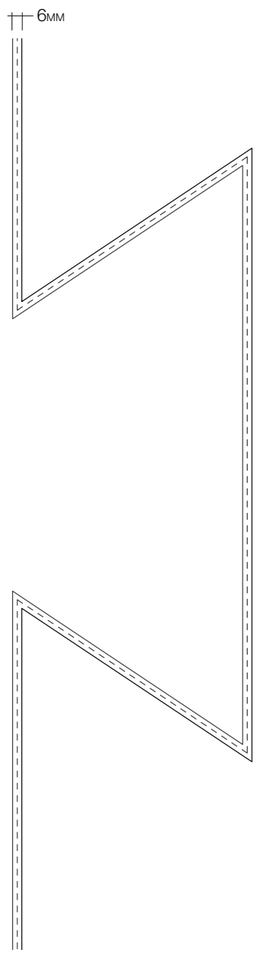

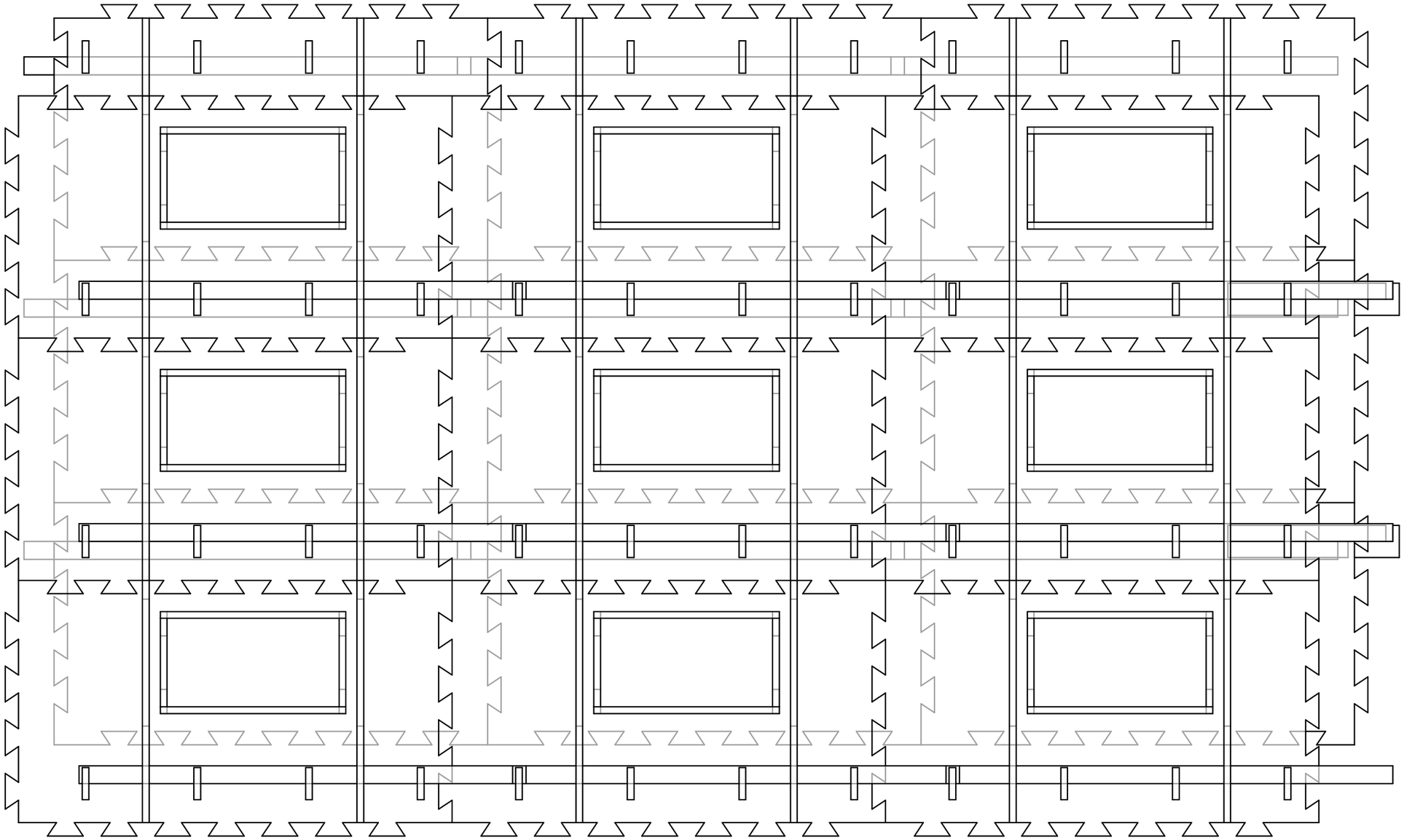

SCALE 1:50 @ A3

0 0.5 1 2 M.

PANEL DEVELOPMENT:

The panel is inserted between the beams of the floor below and slides in till it reaches its locking position with the panel underneath.
A CLT (Cross Laminated Timber) bar slide in between the panel and the beams securing the structure.

The floor beams have embedded flitch plate ends because they are vulnerable to failure by shearing off.

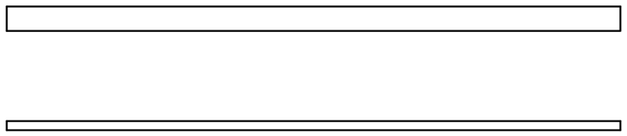

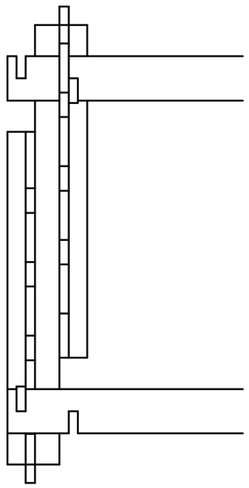

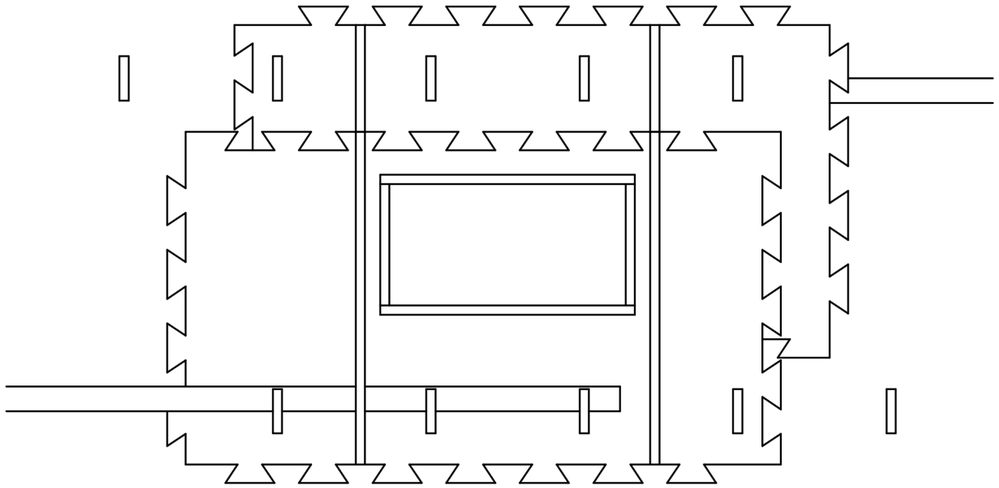

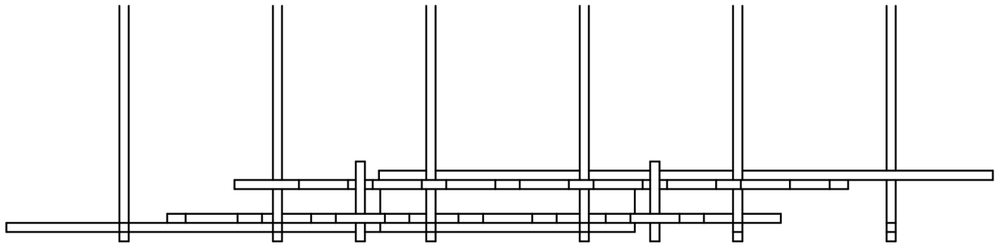

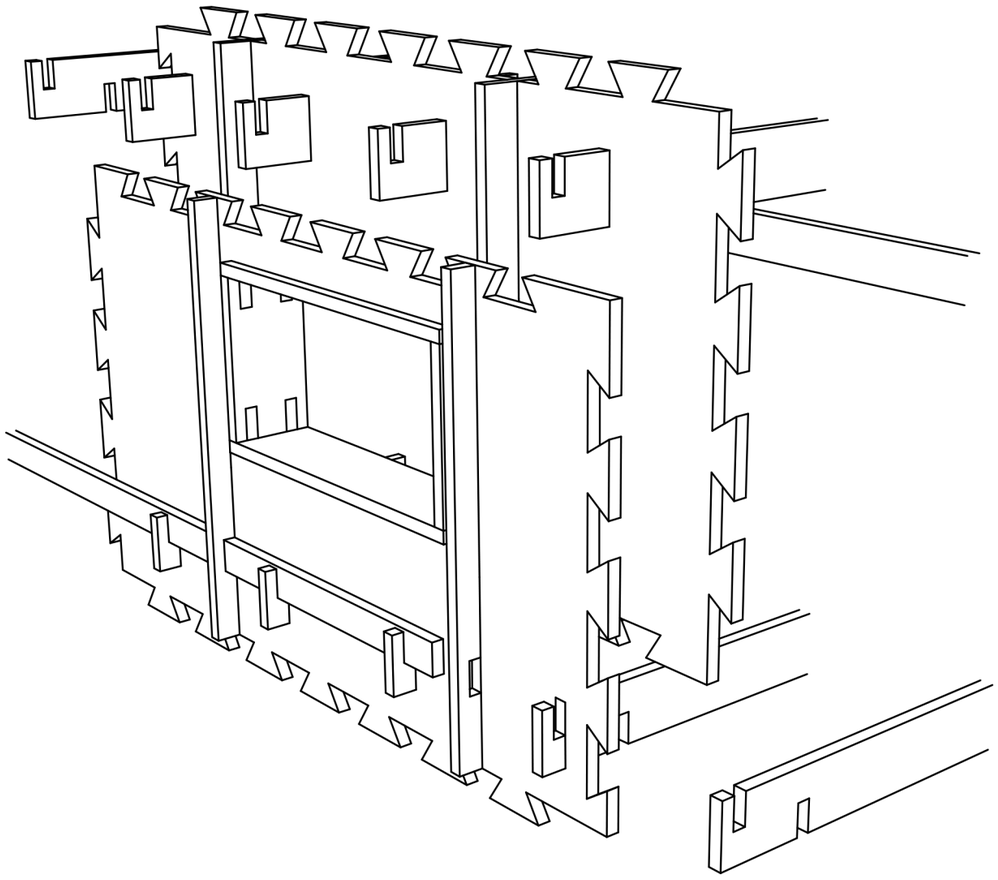

SCALE 1:50 @ A3

0 0.5 1 2 M.

CORNER DETAIL:

The corner details follow the same design approach.
The only difference is that being a more fragile element, it requires eight stainless steel brackets and screws.

Preassembled in a factory, the corner detail is the first one to be placed during construction.

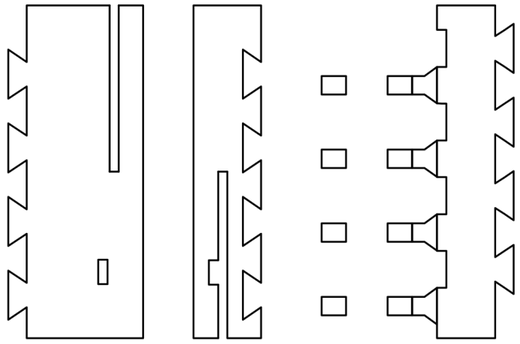

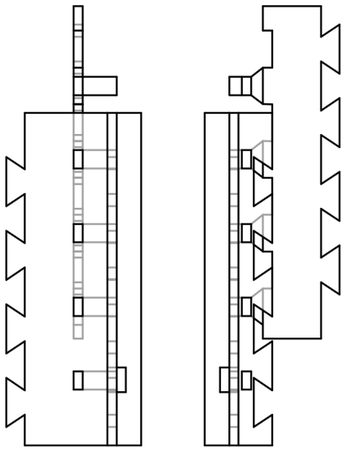

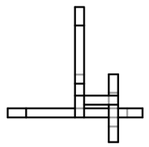

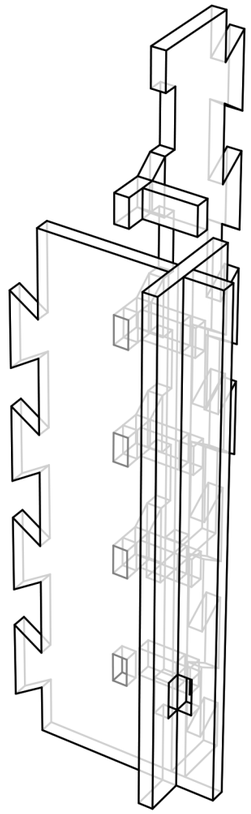

SCALE 1:50 @ A3

0 0.5 1 2 M.

CORNER DETAIL:

EXTERNAL VIEW

This drawing shows how the horizontal offset meet the external corner.

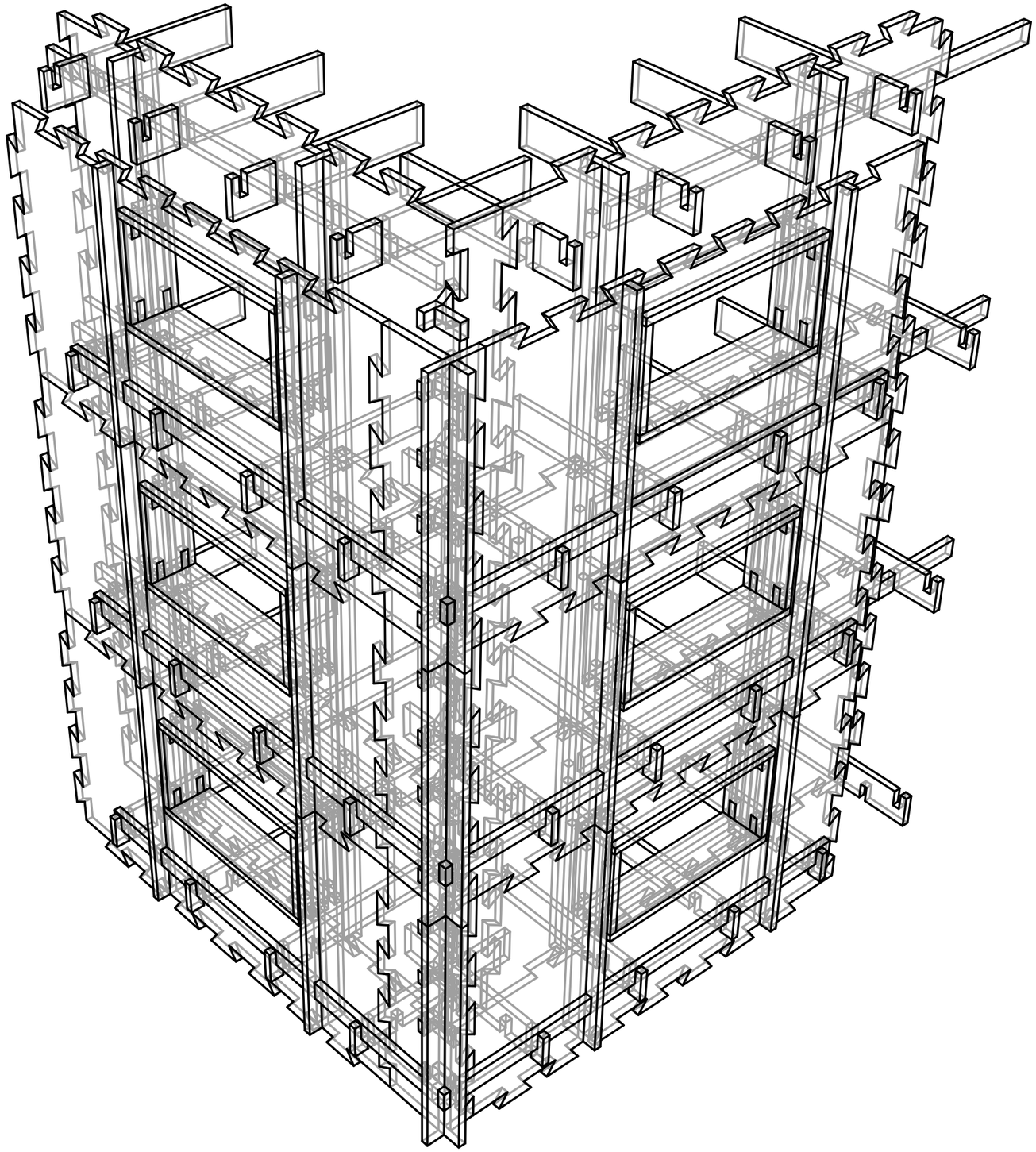

CORNER DETAIL:

INTERNAL VIEW

This drawing shows how the horizontal offset meet the external corner.

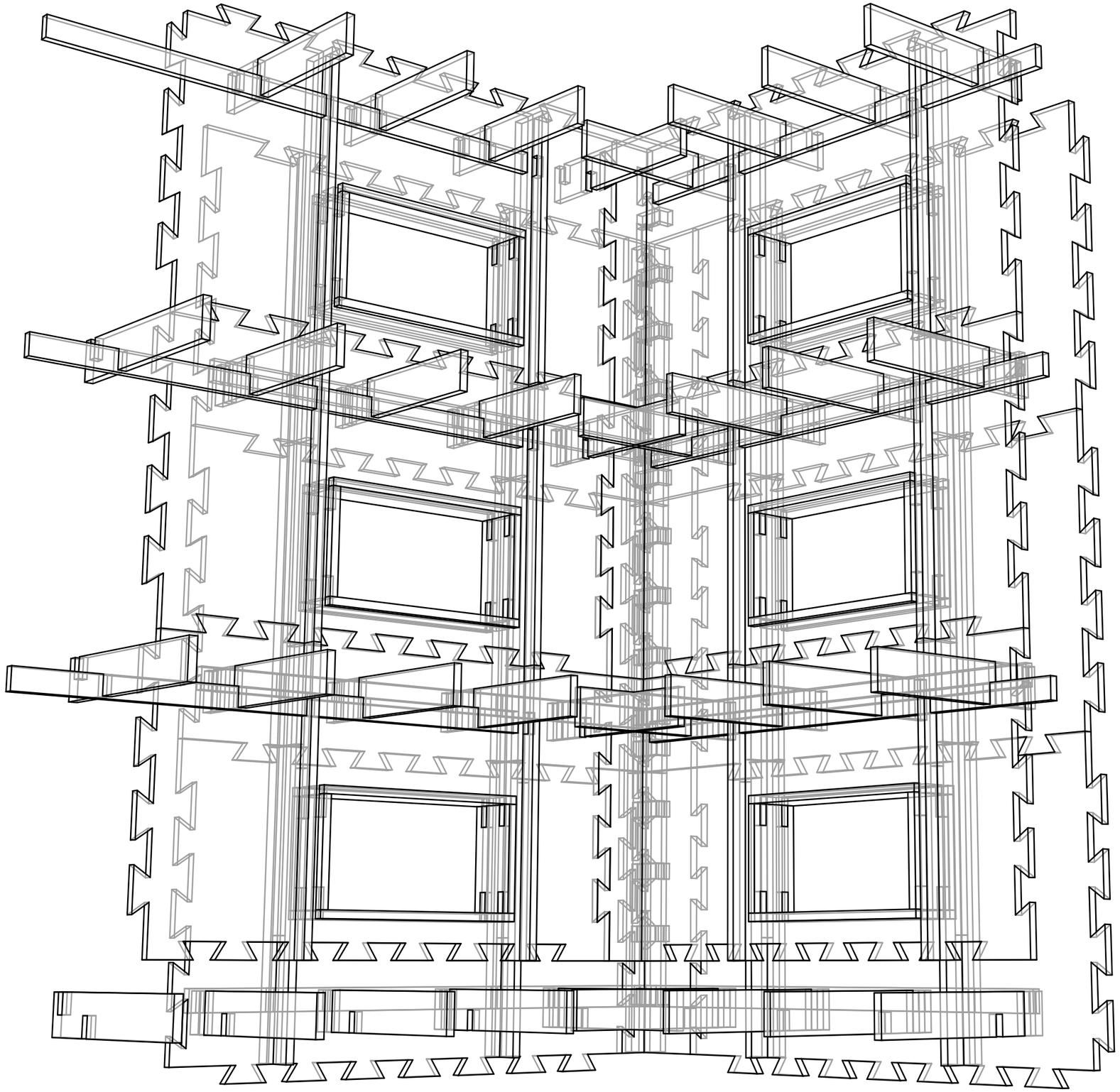

CORE DETAIL:

PLAN

This drawing shows the layout of the core with 4 corners and 4 panels.

Internal partition sits on the floor, increasing the acoustic and fire performances.

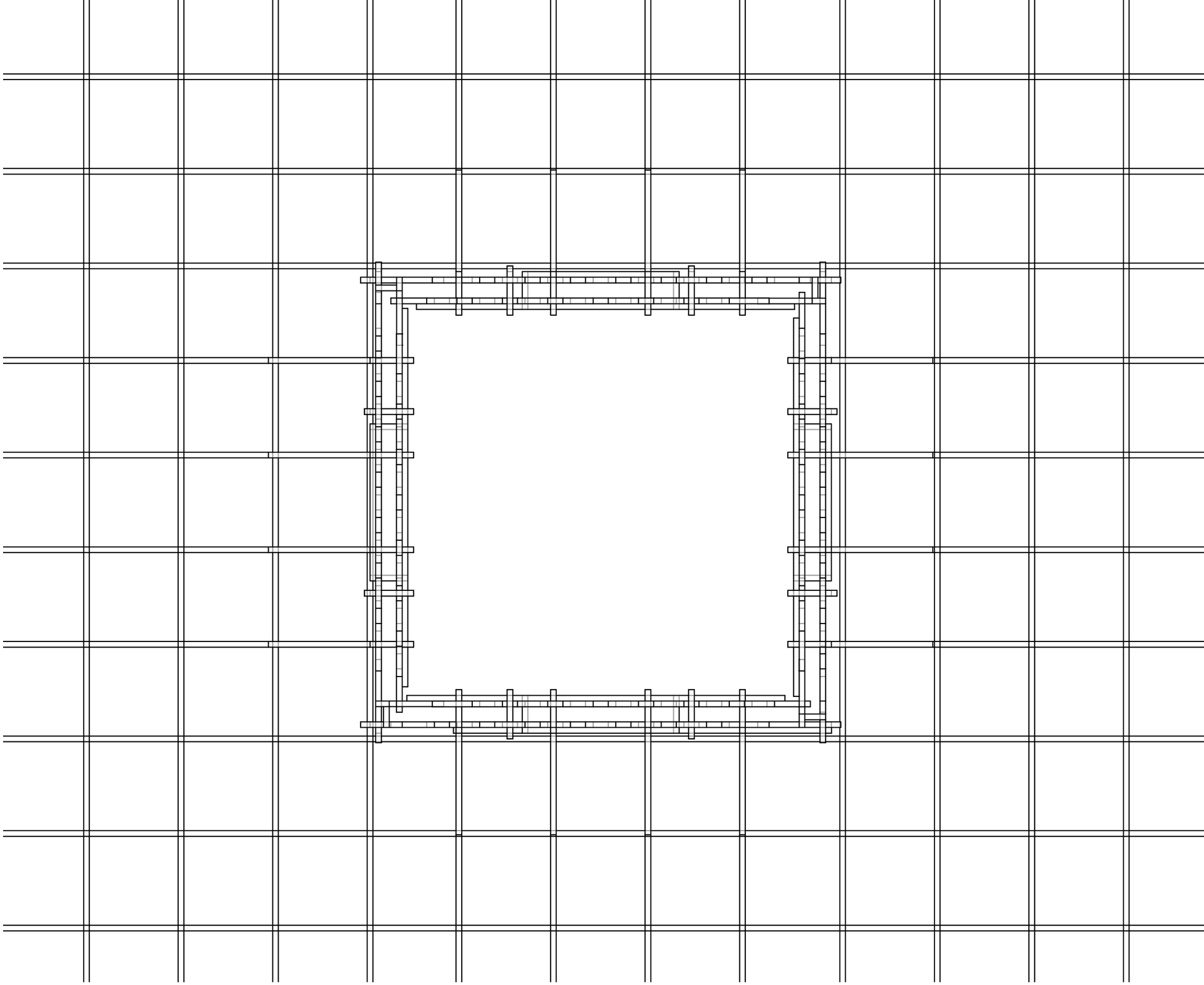

SCALE 1:50 @ A3

0 0.5 1 2 M.

CORE DETAIL:

AXONOMETRIC VIEW

This drawing shows the layout of the core with 4 corners and 4 panels.

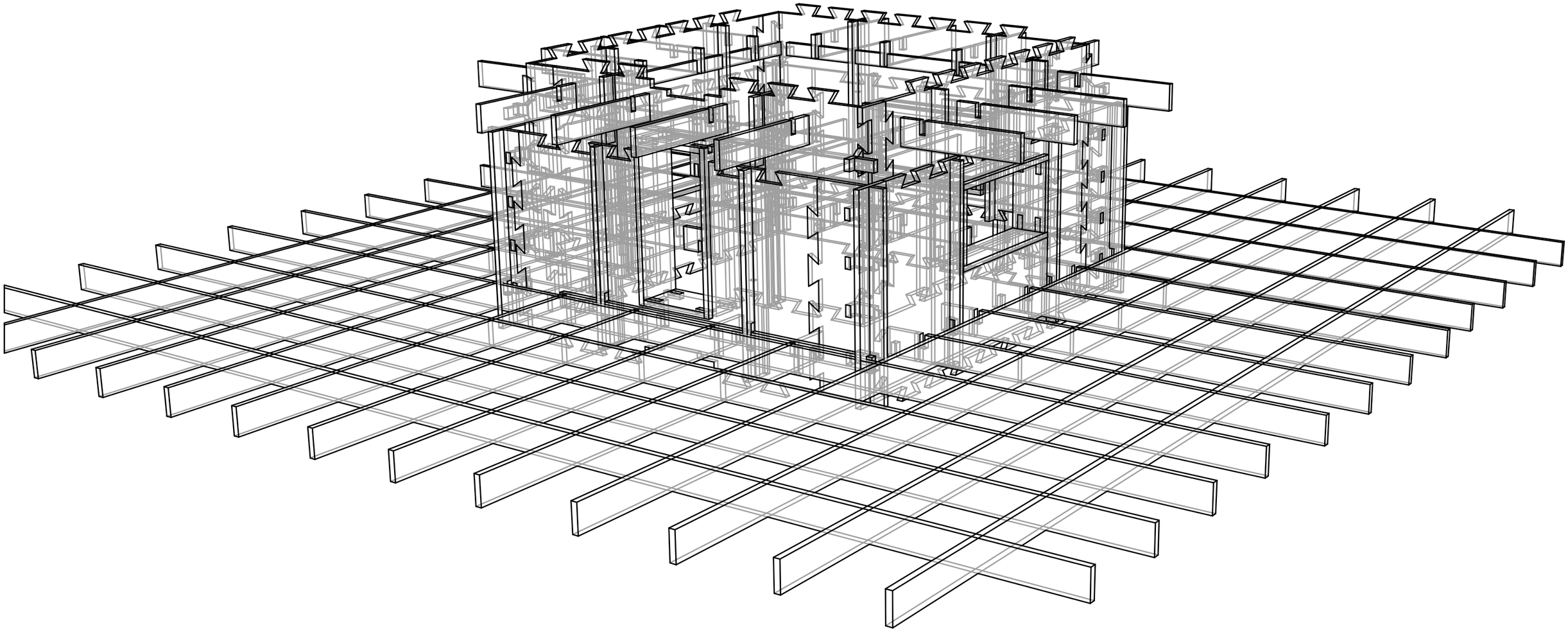

FLOOR BEAMS STRUCTURE:

The natural consequence of a panelling system with straight angles and perpendicular beams is a bidirectional timber-beam floor, which follows the same design approach of interlocking elements.

The beams are placed in such a way to interlace and create safer stability in case of damages or failure of a structural element.
The diagram below shows that the first grid to be placed is A, then B and finally A2.

The floor beams have embedded flitch plate ends because they are vulnerable to failure by shearing off.

Screws with two lots of opposing threads at each end of shaft that pull parts together can increase shear strength. Diagonally through a joint or diagonally across a gap.

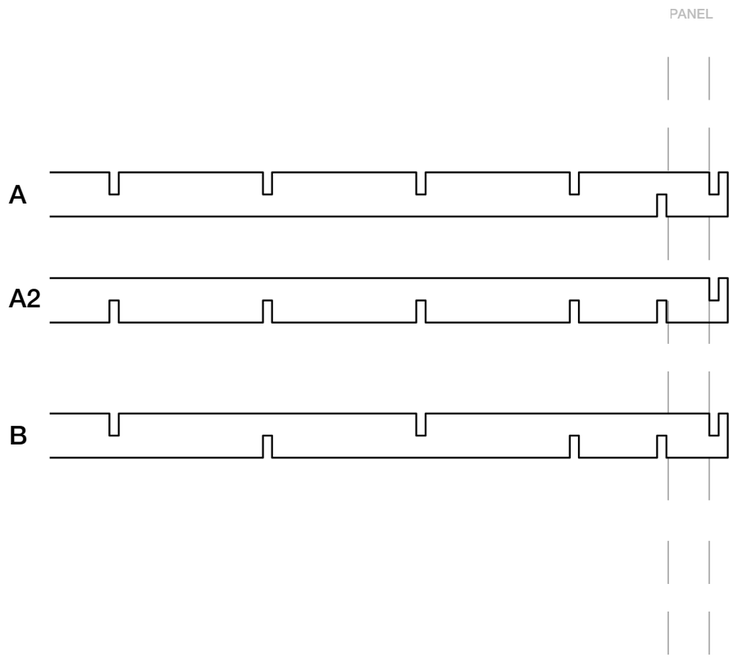

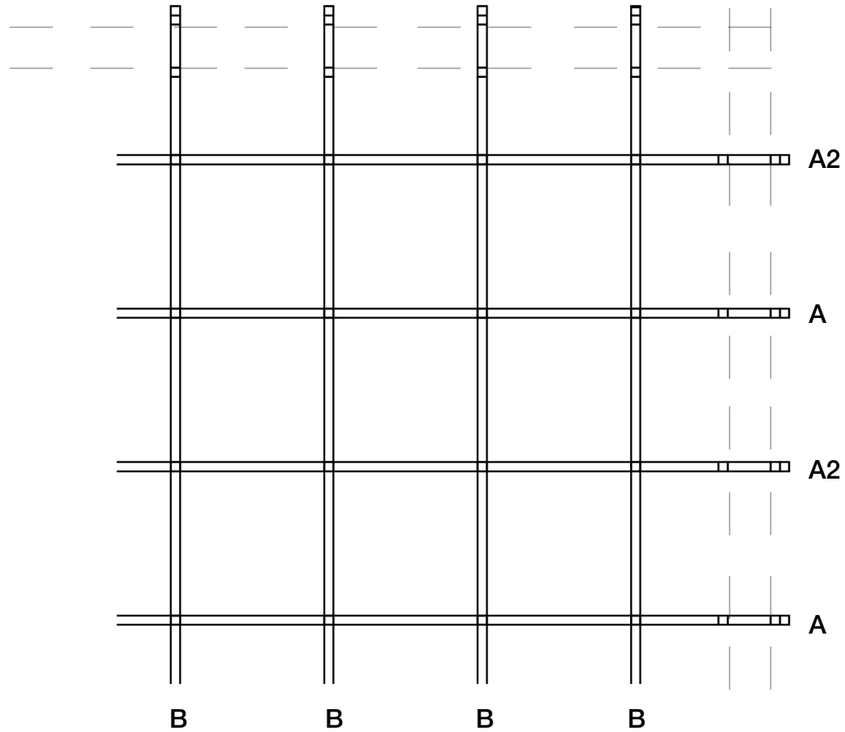

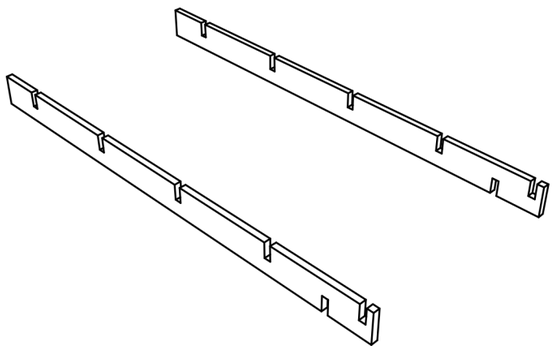

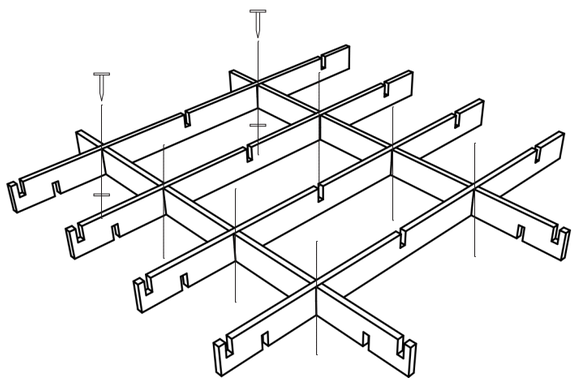

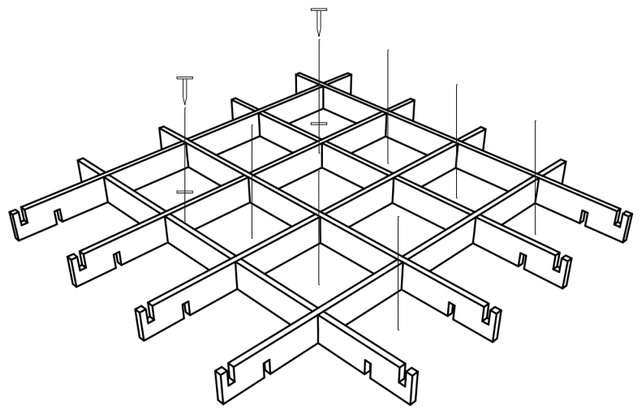

SCALE 1:50 @ A3

0 0.5 1 2 M.

BUILDING PROCESS:

Screeds level floors and mortar beds level walls. Wall plates set level line for roof trusses and they are anchored down.

The concrete foundation forms the base - appropriately designed - in which the LVL panels sit.

Once the concrete is dry enough the assembling process can start.
The corner panels are the first one to be placed, then the rest of the panels are fitted and secured. The top floor beams are placed and the same process over again for each floor above.

The building could also have an additional cladding to mimic its context and the roof is been deliberately left blank to suggest that other floors could be added and that its design can be modified forming a broad variety of buildings with the same system.

According to the context in which this pre-fab LVL building would be built the thermal requirements vary.

A 200mm gap in between the two layers of the panel gives generous space for insulation or a void that can be used as a services riser - Appropriate fire stopper have to be designed with the help of a specialist team.

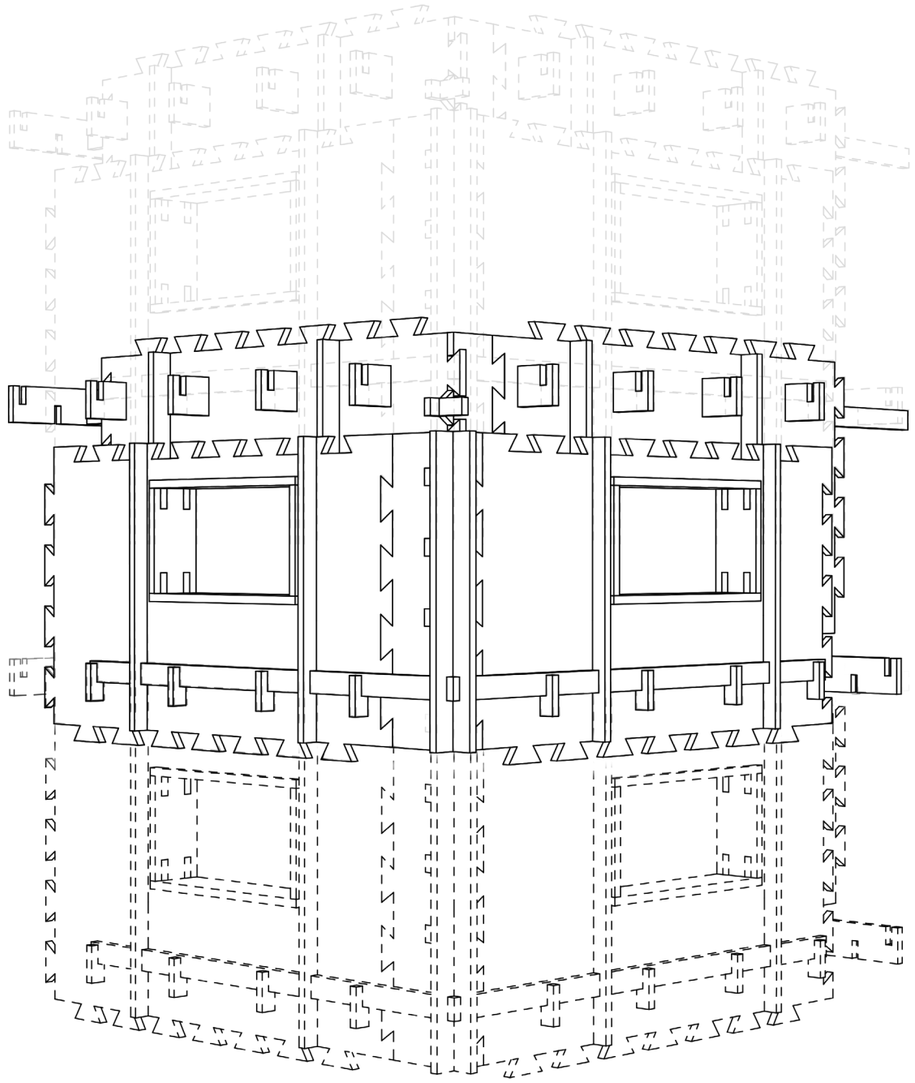

BUILDING PROCESS:

These diagrams show the building process.

It starts form the corner detail, then the panels and finally the floor beams and the additional beam to secure the structure in place.
The beams are assembled on site.

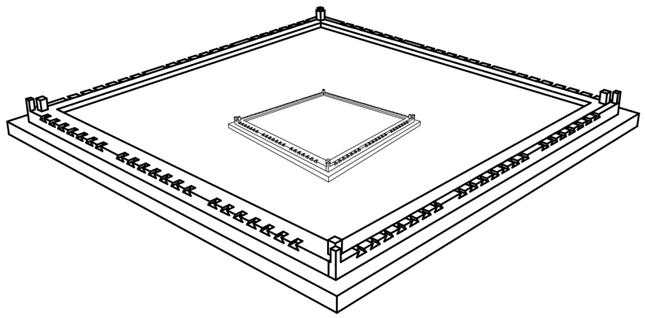

Concrete base

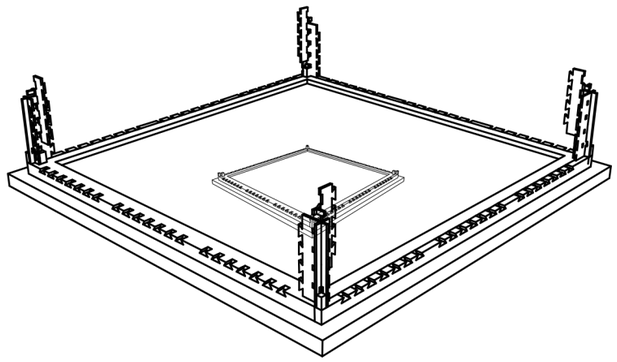

Corner Detail

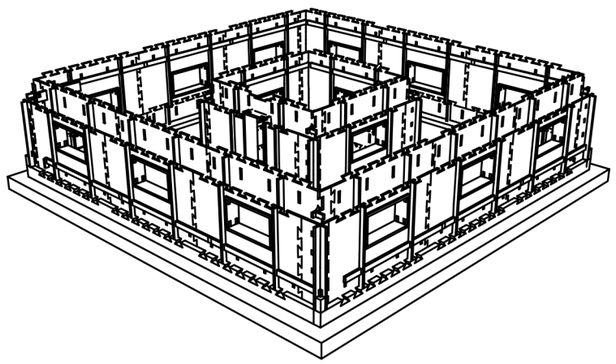

Walls and core

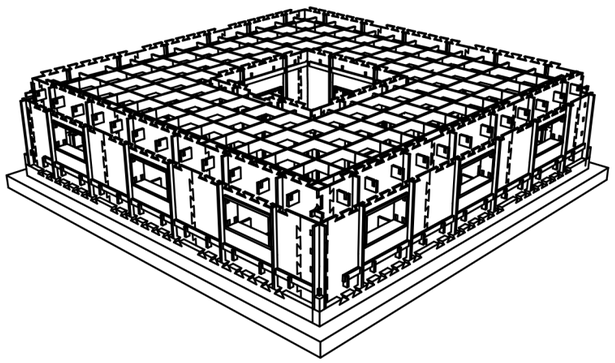

Beams

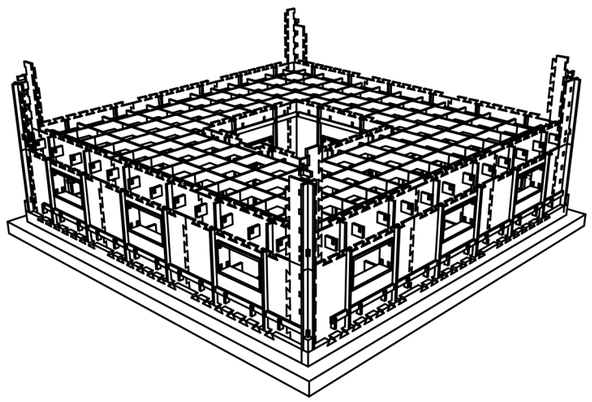

Next level up

TECHNICAL DRAWINGS:

The main component of this panel system is made out of two identical LVL panels and the third one as a joint. Insulation is attached on the inner face.

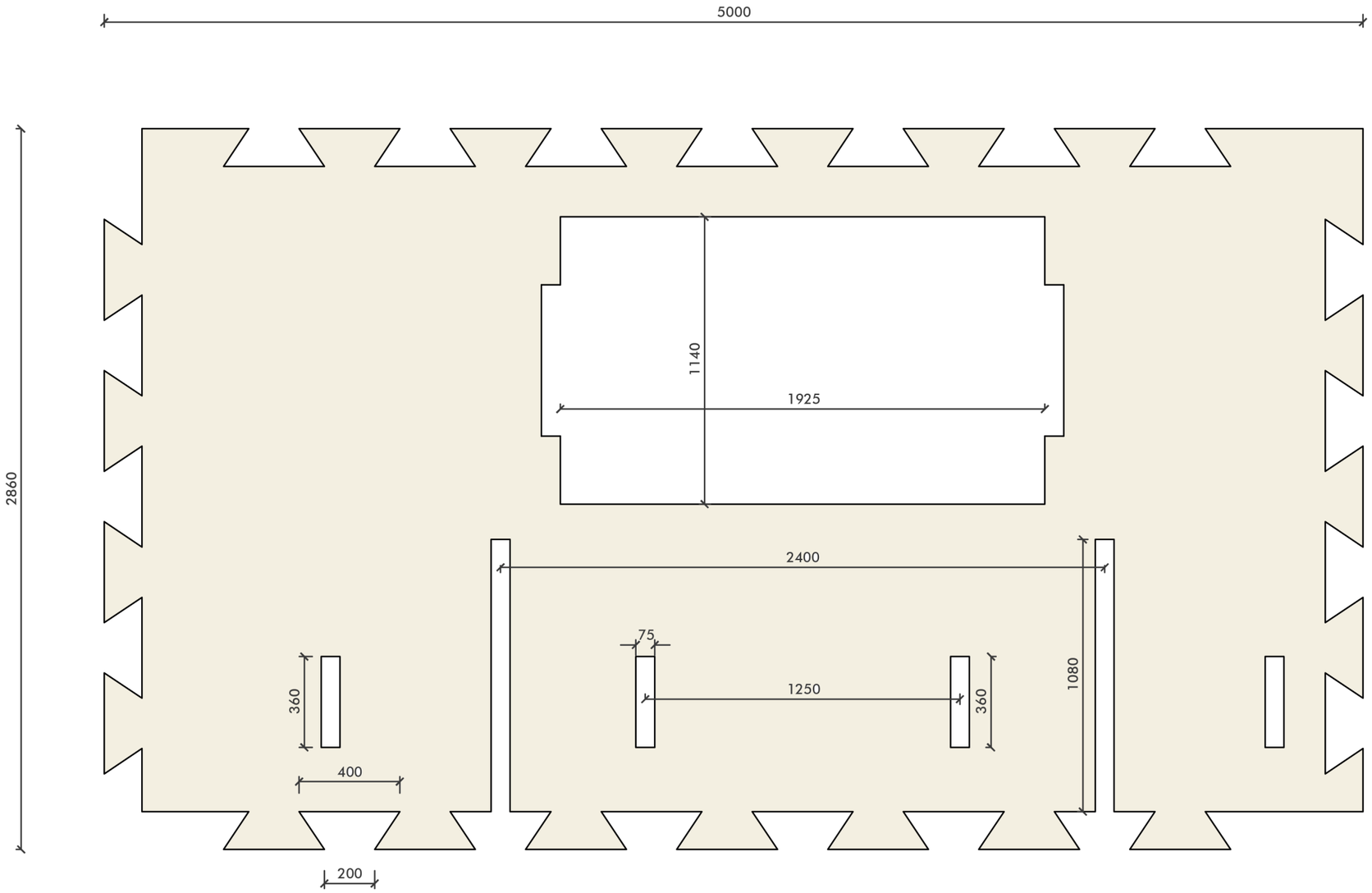

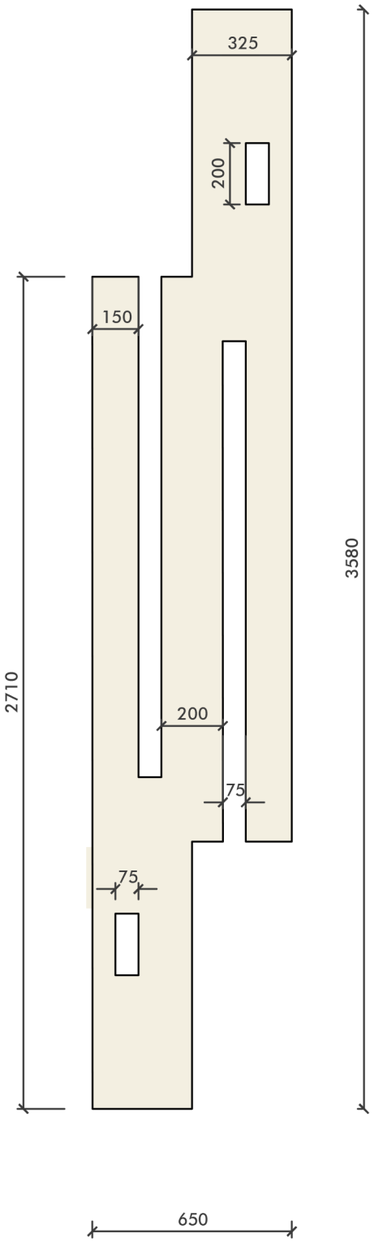

SCALE 1:20 @ A3

0 0.5 1 M.

AN ALTERNATIVE

TECHNICAL DRAWINGS:

This drawing shows the configuration of the panel once installed, in plan and section.
The elevation is a simplified version for an easier understanding.

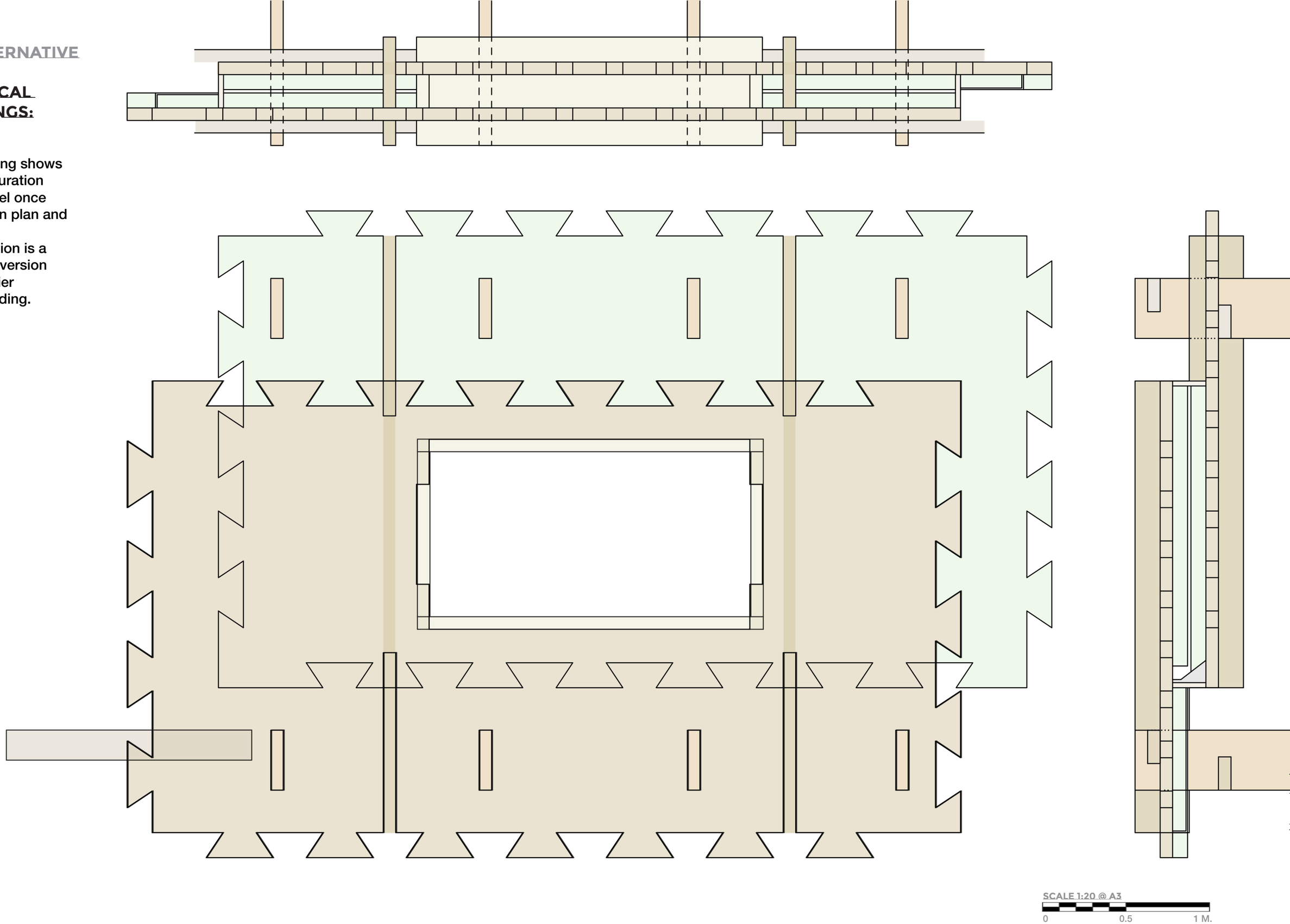

TECHNICAL DRAWINGS:

PLAN

1. LVL Jigsawed panel
2. LVL Connection joint
3. LVL Window frame
4. Insulation
5. Air gap
6. --
7. Cavity closer (wood)
8. Mild steel fire barrier
9. LVL Panel secure beam
10. LVL Floor beams
11. Rubber sealing rod
12. Variable External finish

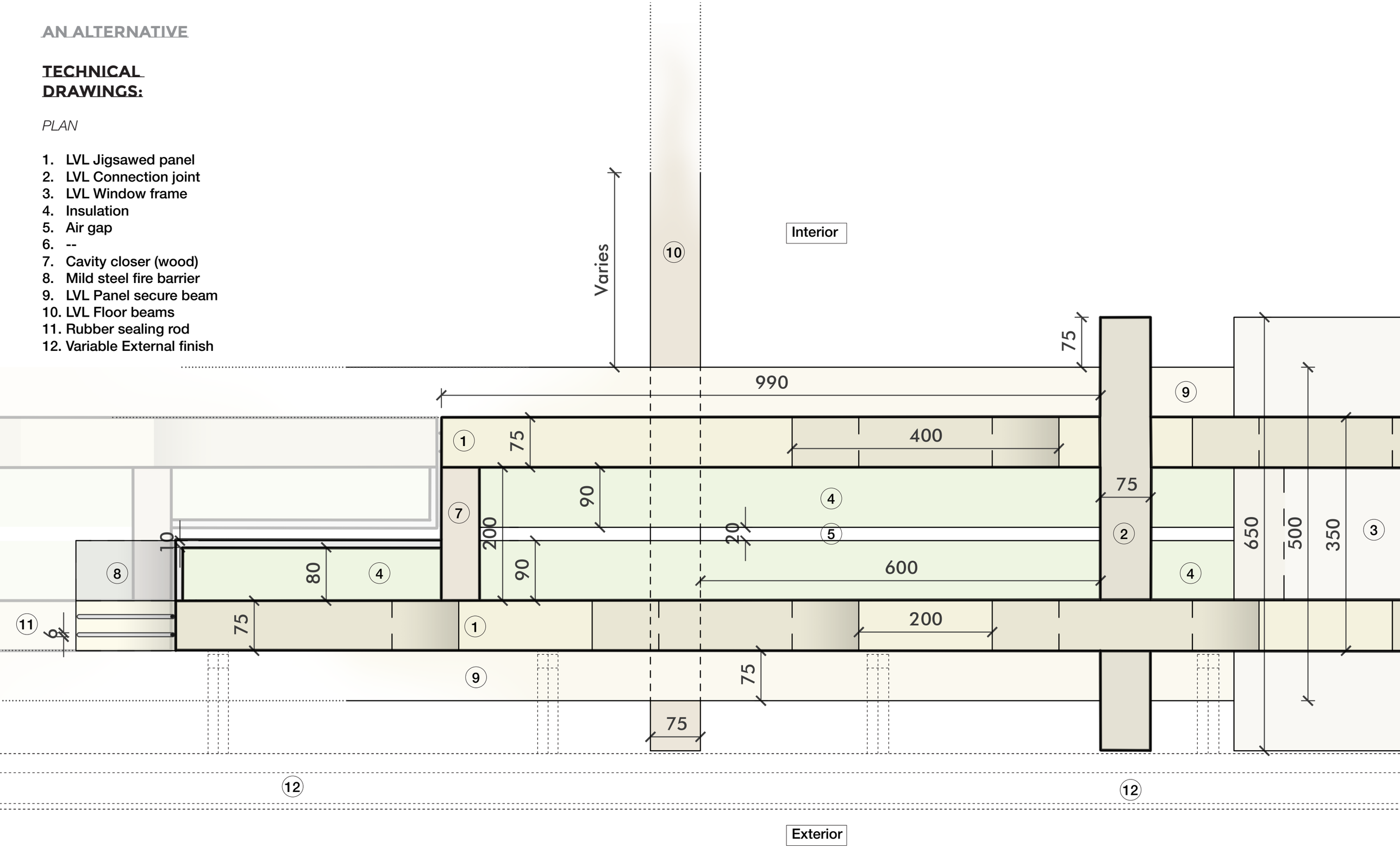

SCALE 1:5 @ A3

Millimeters

0 100 200 300 400 500

AN ALTERNATIVE

TECHNICAL DRAWINGS:

SECTION

1. LVL Jigsawed panel
2. LVL Connection joint
3. LVL Window frame
4. Insulation
5. Air gap
6. --
7. Cavity closer (wood)
8. Mild steel fire barrier
9. LVL Panel secure beam
10. LVL Floor beams
11. Rubber sealing rod
12. Variable External finish

AN ALTERNATIVE

TECHNICAL DRAWINGS:

PLAN

1. LVL Jigsawed panel
2. LVL Connection joint
3. LVL Opening frame
4. Services
5. LVL Panel secure beam
6. LVL Floor beams
7. Rubber sealing rod

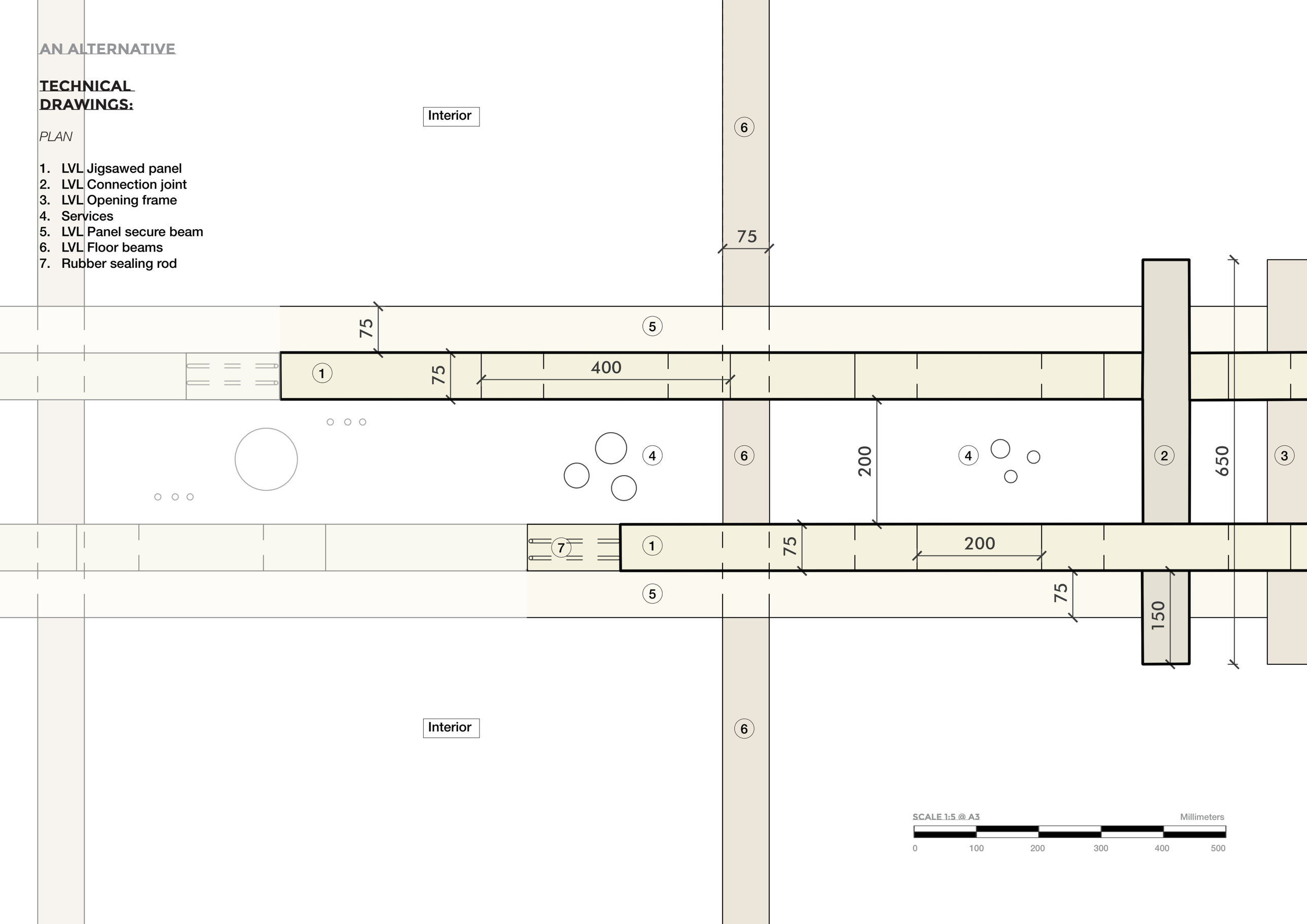

REFERENCES AND IMAGES SOURCE:

http://postwarbuildingmaterials.be/material/pre-cast-concrete-facade-panels/

http://postwarbuildingmaterials.be/material/heavy-prefab-systems/

http://prefabricate.blogspot.com/2017/05/prefabrication-experiments-131-settings.html

https://books.google.co.uk/books?id=G8E6D-wAAQBAJ&pg=PA38&lpg=PA38&dq=-cAMUS+method+patented+by+Raymond+-Camus+in+1948&source=bl&ots=2jvJb-8GX-d&sig=ACfU3U2LTF_UzLJx-ZCtLaZw7xqih-j78SA&hl=en&sa=X&ved=2ahUKEwiMhda6_-roAh-VbilwKHQC4CEoQ6AEwD3oECAsQKQ#v=onep-age&q=cAMUS%20method%20patented%20by%20Raymond%20Camus%20in%201948&f=false

https://www.towerblocksuk.com/lps

https://www.designingbuildings.co.uk/wiki/Adam_Curtis_-_The_Great_British_Housing_Disaster

https://www.youtube.com/watch?v=Ch5VorymiL4

https://www.bbc.co.uk/news/uk-england-london-40272168

https://en.wikipedia.org/wiki/Tower_blocks_in_Great_Britain

COPYRIGHT:

SPECIAL THANKS:

THIS DESIGN IS BEEN DEVELOPPED WITH THE TECHNICAL SUPPORT OF BRIAN MURPHY.

THANK YOU.